9. System Architecture

9.1 - Overall Architecture

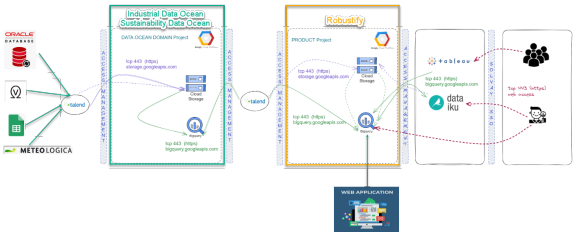

- 9.1 - Overall Architecture
- 9.2 - Components

Responsible & contact points:

- **Alessandro Mainardi - Project Owner**
- **Simon Bourguignon - Delivery Manager**
- **Alba Carrero/ Gaetan Frenoy - Product Owner**
- **Rui Ferraz - Project Manager**

9.2 - Components

- Frontend:
- Backend:
- Database:
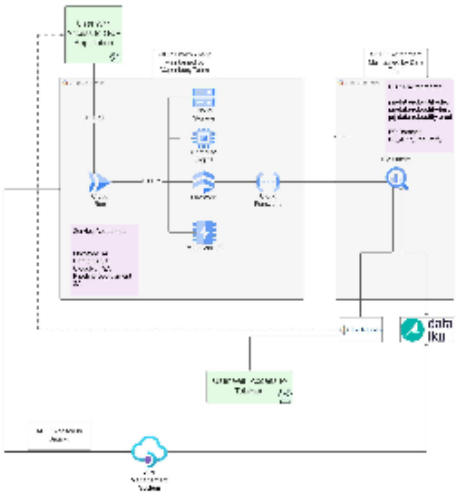
Web-app architecture