BW RTR - CBS Invoicing PAPM flat file loading /!\ Obsolete /!\

⚠️ ⚠️ ⚠️ ⚠️

The new wiki link for this data flow is here:

Technical Documentation - PAPM/CBS invoicing

Please update the new doc there and no longer here.

⚠️ ⚠️ ⚠️ ⚠️

- General presentation
  - List of contacts
  - Objective of the application
    - Background:
    - Objective
  - Usage information
  - History
- Roles & Access
  - Roles and access
  - Authorization objects
- Dataflow overview
- Functional and Technical rules on Workbench + Reporting
  - Rules & Explanations
    - CBS-PAPM-Driver 1-Amount
    - CBS-PAPM-Driver 2- HeadCount
    - CBS-PAPM-Driver 3-Cadre and All
    - Flat file driver 03 structure : Advanced DSO APCOPA03
  - Dependencies with other applications
- Data loadings
  - Info providers and objects loaded
    - Data Load process Steps and Process Chains
    - Step 1: Initializing/Deleting Data from previous loads through application(PCs trigerred thro' event trigger)
    - Step 2: Flat File loading for New Driver KPIs and data-flows
    - Step 3 : Load data to aDSOs through main process chain
      - The main process chain to load all three driver data on a daily basis from PSA to ADSO is as below
        - PC_CBS_PAPM - CBS: Global PC PaPM PC_CBS_PAPM Change
  - Loading frequency
    - 1. Data Loading to PSA by user :
    - 2. Data Loading to PSA for reporting:
    - Process Chain Details
    - 1. PC_CBS_PAPM_001A - PC CBS PaPM - Driver 1 Amount Del PSA - Event Trigerred - PC_CBS_PAPM_001A
    - Main Chain
    - Data-loading Layers
    - Transformations
      - 1.DTS_FF_PAPM_002 PC_FILE -> ADSO APCBSI01
      - 2. DTS_FF_PAPM_003 PC_FILE -> ADSO APCBSI02
      - 3. DTS_FF_PAPM_004 PC_FILE -> ADSO APCBSI03
  - Average performance
  - Record Keeping
- Reporting
  - Queries End User Documentation
  - Main queries
  - Main functionalities
  - Broadcast
- Maintenance
  - Known bugs
  - Recurring procedure
  - Planned Evolution

General presentation

List of contacts

- Charlotte ROLLIER : Finance Reporting Leader
- Guillaume Thevenet (SBS Information Services) : BW Coordinator

Objective of the application

Background:

The inter-company service charges and cost allocation process for Solvay's Corporate and Business Services (CBS) is time consuming, manually maintained, lacks appropriate technology enablement and is controlled across multiple functions.

We need a process to automate the data loading process to remove the drawback of manual process.

Objective

The objective of application is to allow users loading data from excel files with validation of content.

Tool Leader + IT leader of the application:

Usage information

Around 4 users worldwide.

History

The project was started in May/2016 and was in go-live in June/2016. It was requested by CBS project manager Nathalie Delahousse and approved bt Sandrine Micollet,

Link about the specifications :

CBS Database - support for inter-company invoicing

Roles & Access

Roles and access

Toe Be Confirmed

List of application role + menu role and explanation if we have several applications role with specials rules.

Role Code	Role Description	Explanation
TBC		

Authorization objects

List of autorisation objects mandatory for the application.

Authorization object	Explanation
TBC	

Dataflow overview

blocked URL

https://drive.google.com/drive/folders/0B0qn89R0RGdqYkZZOFZyYXlXVkE

Exemple of dataflow overview :

Template Application name DataFlow

Functional and Technical rules on Workbench + Reporting

We can create authorization object to restrict access to users for Transaction code ZBW_PAPM.

We can also restrict access at granular level for all users, example at company code or controlling are etc..

For driver data available for PaPM, we can display data available in BW in the screen.
We control the content of the file to be sure that there is no error (missing field or incorrect values).

Once data is loaded:

- The file is saved as csv in /exploit/BW/PaPM in BW server
- The previously loaded data in BW staging is deleted
- The info-packages are executed to load the new flat file previewed and checked by user in respective PSAs.
- The process chains are executed
    - By schedule (hourly with abap condition looking time in global filter).
    - Manage “delta queue” is several loadings at the same time
- Three other process chains to load from PSA to BW Info provider
    - For all 3 driver data
    - Loads data in respective ADSOs
    - Process chain runs twice a day (managed in Global filter master data)

An ABAP program was developed to help user loading flat file for all three driver data required for PaPM application.

We have created a specific transaction : **Z BW_PAPM** to run the ABAP program

The program technical name is : **ZBW_CBS_INT_COMP_INV**

The program title/description is : ***Load CBS PaPM Data - 3 Drivers and Transactional source***

With this transaction, user can load excel file for

- CBS-PAPM-Driver1-**Amount.**
- CBS-PAPM-Driver2-**Head Count**
- CBS-PAPM-Driver3-**Cadre and All**

The transaction is available in SOLIA portal. For information, it's better to use IE and not Chrome

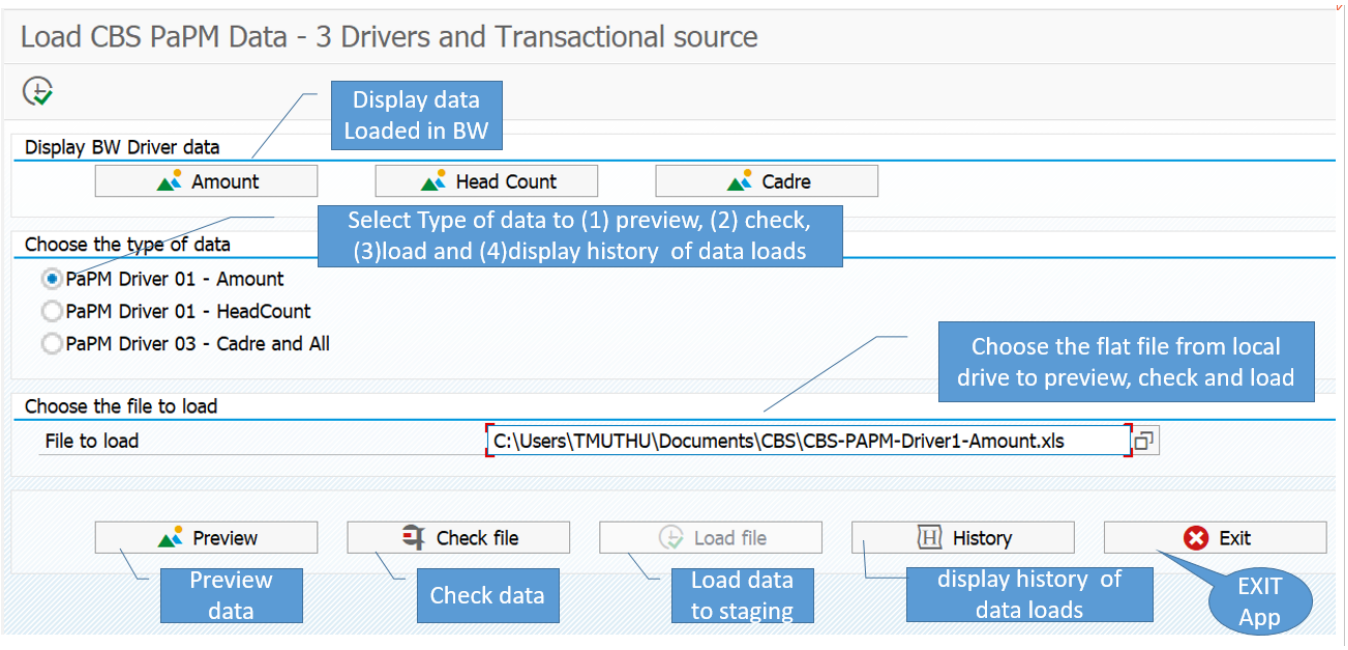

Rules & Explanations

Below there is a list of entries in global filter used to support the program to do several activities, like: check authorizations, upload flat file, check company code, run process chain, etc.

Global Filter Stream (Application)	Global Filter Rule	Global Filter	Global Filter Description	Global Filter Sign	Global Filter Option	Global Filter Low Value	Global Filter Hight Value	Global Filter Active
PAPM	AMNT	1	FILE NAME			CBS-PAPM-Driver1-Amount.xls		Y
PAPM	AMNT	2	DELTA QUEUE			0		Y
PAPM	AMNT	3	COUNTER OF LOADING			19		Y

PAPM	AUTHGR	1	Authorization	I	EQ	ZR_CBS_PAPM_FILE_UPLOAD		Y
PAPM	AUTHGR	2	Authorization	I	EQ	ZR_CBS_PAPM_FILE_UPLOAD_TCODE		Y
PAPM	CADR	1	FILE NAME			CBS-PAPM-Driver3-CADRE.xls		Y
PAPM	CADR	2	DELTA QUEUE			0		Y
PAPM	CADR	3	COUNTER OF LOADING			9		Y
PAPM	COAREA	1	Controlling area	I	EQ	ZCYT		Y
PAPM	COMPCDE	1	Company Code	I	EQ	7008	USD	Y
PAPM	COMPCDE	2	Company Code	I	EQ	7764	EUR	Y
PAPM	HDCN	1	FILE NAME			CBS-PAPM-Driver2-HC.xls		Y
PAPM	HDCN	2	DELTA QUEUE			0		Y
PAPM	HDCN	3	COUNTER OF LOADING			17		Y
PAPM	LOGSYS	1	Source System	I	EQ	ZCBSPAPMUPLD		Y
PAPM	PAPM_RUN	1	Identify current run for CY process chain (11,..., 15)	I	EQ	12		Y
PAPM	PAPM_STIME	1	START TIME ALLOWED for PAPM Loading	I	EQ	11	LOAD	Y
PAPM	PAPM_STIME	2	START TIME ALLOWED for PAPM Loading	I	EQ	15	LOAD	Y
PAPM	SENDMAIL	1	Send email	I	EQ	Thanga.Muthu-ext@solvay.com		Y
PAPM	TIME	1	REFERENCE TIME FOR PAPM LOAD	I	EQ	12		Y
PAPM	TYPE	1	REFERENCE TYPE FOR PAPM LOAD	I	EQ	NO_LOAD		Y
PAPM	UNIXAMNT	1	Unix for Driver 1- Amount	I	EQ	/exploit/BW/PaPM/Driver_1_Amount		Y
PAPM	UNIXCADR	1	Unix for Driver 3 for cadre	I	EQ	/exploit/BW/PaPM/Driver_3_Cadre		Y
PAPM	UNIXHDCN	1	Unix for Driver 2 for HeadCount	I	EQ	/exploit/BW/PaPM/Driver_2_HeadCount		Y

WBD: Change Master Data of InfoObject C_GLBFILT

Save | New | Delete Keys | Application Log | Most Recent Versions | Display Values without Master Data

Master Data

Time Independent

Add Line | Withdraw Changes | Change all records | Details | Where-Used | Document Browser

Global Filter Stream (Applica…	Global Filter Rule	Global Filter	Global Filter Description	Global Filter Sign	Global Filter Option	Global Filter Low Value	Global Filter Hight Value	Global Filter Active
PAPM	AMNT	001	FILE NAME			CBS-PAPM-Driver1-Amount.xls		Y
PAPM	AMNT	002	DELTA QUEUE			0		Y
PAPM	AMNT	003	COUNTER OF LOADING			15		Y
PAPM	AUTHGR	001	Authorization	I	EQ	ZR_CBS_PAPM_FILE_UPLOAD		Y
PAPM	AUTHGR	002	Authorization	I	EQ	ZR_CBS_PAPM_FILE_UPLOAD_TCODE		Y
PAPM	CADR	001	FILE NAME			CBS-PAPM-Driver3-CADRE.xls		Y
PAPM	CADR	002	DELTA QUEUE			0		Y
PAPM	CADR	003	COUNTER OF LOADING			7		Y
PAPM	COAREA	001	Controlling area	I	EQ	ZCYT		Y
PAPM	COMPCDE	001	Company Code	I	EQ	7008	USD	Y
PAPM	COMPCDE	002	Company Code	I	EQ	7764	EUR	Y
PAPM	HDCN	001	FILE NAME			CBS-PAPM-Driver2-HC.xls		Y
PAPM	HDCN	002	DELTA QUEUE			0		Y
PAPM	HDCN	003	COUNTER OF LOADING			15		Y
PAPM	LOGSYS	001	Source System	I	EQ	ZCBSPAPMUPLD		Y
PAPM	SENDMAIL	001	Send email	I	EQ	Thanga.Muthu-ext@solvay.com		Y
PAPM	UNIXAMNT	001	Unix for Driver 1- Amount	I	EQ	/exploit/BW/PaPM/Driver_1_Amount		Y
PAPM	UNIXCADR	001	Unix for Driver 3 for cadre	I	EQ	/exploit/BW/PaPM/Driver_3_Cadre		Y
PAPM	UNIXHDCN	001	Unix for Driver 2 for HeadCount	I	EQ	/exploit/BW/PaPM/Driver_2_HeadCount		Y

There is an ABAP condition ZBW_UPDATE_GLB_FILTER used to define the hours that the process should be executed based on global filter rule PAPM_STIME, twice a day @11 Hours and 15 Hours.

WBD: Change Master Data of InfoObject C_GLBFILT

Save and Activate | New | Delete Keys | Application Log | Most Recent Versions | Display Values without Master Data

Selection

Master Data

Time Independent

Add Line | Withdraw Changes | Change all records | Details | Where-Used | Document Browser

Global Filter Stream (Applicat…	Global Filter…	Global Filter	Global Filter Description	Global Filter Sign	Global Filter Option	Global Filter Low V…	Global Filter Hight Value	Global Filter Active
PAPM	PAPM_STIME	001	START TIME ALLOWED for PAPM Loading	I	EQ	11	LOAD	Y
PAPM	PAPM_STIME	002	START TIME ALLOWED for PAPM Loading	I	EQ	15	LOAD	Y

Lay-out of files

CBS-PAPM-Driver 1-Amount

Flat file driver 01 structure : Advanced DSO APCOPA01

Info-Object	Description	Type	Size	Key	Business rules and Comment
0FISCVARNT	Fiscal year variant	CHAR	2	Y	Always K4
0FISCPER	Fiscal year / period	NUMC	7	Y	YYYYMMM
0LOGSYS	source system	CHAR	10	N	check against global filter
C_COMPCDE	Company code	CHAR	4	N	check with C_COMPCDE
C_CCDR01	PAPM Company Code Driver 01	CHAR	250	N	Free Description
K_CCDR01	PAPM Value Company code driver 01	AMNT	23	N	length 17, decimals 3,'.' for decimals, with sign(Unit 0CURRENCY)
0CURRENCY	Currency key	CUKY	5	N	Check against Currency key table /BI0/SCURRENCY

CBS-PAPM-Driver 2- HeadCount

Flat file driver 02 structure : Advanced DSO APCOPA02

Info-Object	Description	Type	Size	Key	Business rules and Comment
0FISCVARNT	Fiscal year variant	CHAR	2	Y	Always K4
0FISCPER	Fiscal year / period	NUMC	7	Y	YYYYMMM
0LOGSYS	source system	CHAR	10	N	check against global filter
C_COMPCDE	Company code	CHAR	4	N	check with C_COMPCDE
C_SITEDR2	PAPM Site driver 2	CHAR	250	N	Free Description
C_CCDR02	PAPM Company code Driver 02	CHAR	250	N	Free Description
K_HCDR02	PAPM Nb Headcount per company Driver 02	NUMB	23	N	length 16, decimals 16,'.' for decimals, with sign

CBS-PAPM-Driver 3-Cadre and All

Flat file driver 03 structure : Advanced DSO APCOPA03

Info-Object	Description	Type	Size	Key	Business rules and Comment
0FISCVARNT	Fiscal year variant	CHAR	2	Y	Always K4
0FISCPER	Fiscal year / period	NUMC	7	Y	YYYYMMM
0LOGSYS	source system	CHAR	10	N	check against global filter
C_COMPCDE	Company code	CHAR	4	N	check with C_COMPCDE
K_CDDR03	PAPM Value Company code driver 03	NUMB	23	N	length 16, decimals 16,'.' for decimals, with sign
K_ALLDR03	PAPM All Head count cadre and no cadre diver 03	NUMB	23	N	length 16, decimals 16,'.' for decimals, with sign

Dependencies with other applications

Data loadings

Info providers and objects loaded

Data Load process Steps and Process Chains

Step 1: Initializing/Deleting Data from previous loads through application(PCs trigerred thro' event trigger)

1. **PC_CBS_PAPM_001A** - PC CBS PaPM - Driver 1 Amount Del PSA - Event Trigerred - **PC_CBS_PAPM_001A**
2. **PC_CBS_PAPM_002A** - PC CBS PaPM - Driver 2 Head Count Del PSA - Event Trigerred - **PC_CBS_PAPM_002A**
3. **PC_CBS_PAPM_003A** - PC CBS PaPM - Driver 3 Cadre Del PSA - Event Trigerred - **PC_CBS_PAPM_003A**

Step 2: Flat File loading for New Driver KPIs and data-flows

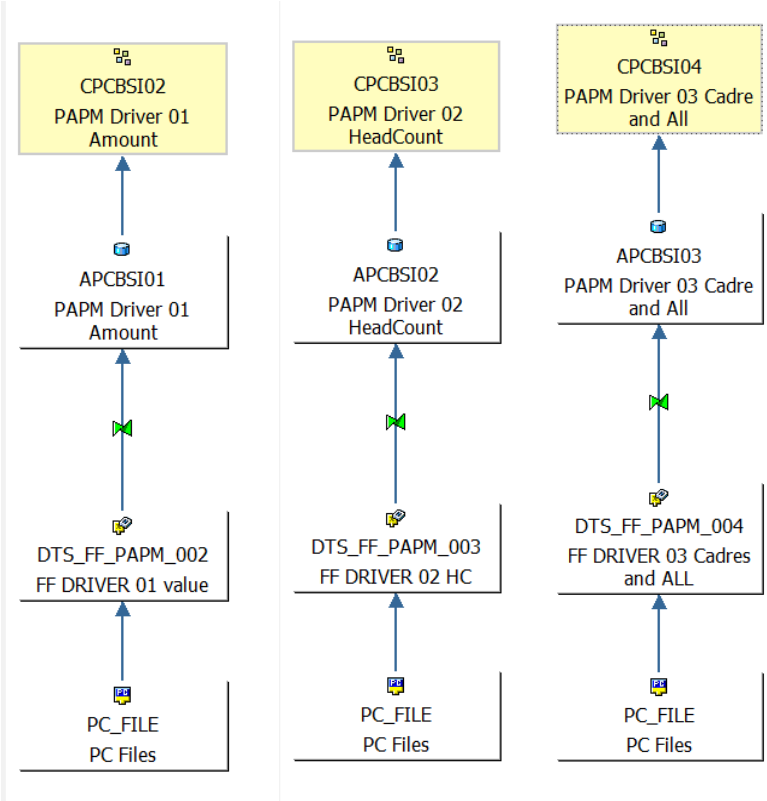

Step 3 : Load data to aDSOs through main process chain

The main process chain to load all three driver data on a daily basis from PSA to ADSO is as below

1. PC_CBS_PAPM - CBS: Global PC PaPM PC_CBS_PAPM Change

142 - PROJECT - CBS PaPM	COMP_PC_CBS_PAPM
CBS: Global PC PaPM	PC_CBS_PAPM
PC CBS PaPM - Driver 1 Amount	PC_CBS_PAPM_001
PC CBS PaPM - Driver 2 Head Count	PC_CBS_PAPM_002
PC CBS PaPM - Driver 3 Cadre	PC_CBS_PAPM_003

Local Process chains to load all three driver data through the application to PSA and Events

1. PC_CBS_PAPM_001 - PC CBS PaPM - Driver 1 Amount
2. PC_CBS_PAPM_002 - PC CBS PaPM - Driver 2 Head Count
3. PC_CBS_PAPM_003 - PC CBS PaPM - Driver 3 Cadre

Loading frequency

1. Data Loading to PSA by user :

Adhoc when users use the application

2. Data Loading to PSA for reporting:

Twice daily at 11 hours and 15 hours

Process Chain Details

1. PC_CBS_PAPM_001A - PC CBS PaPM - Driver 1 Amount Del PSA - Event Trigerred - **PC_CBS_PAPM_001A**

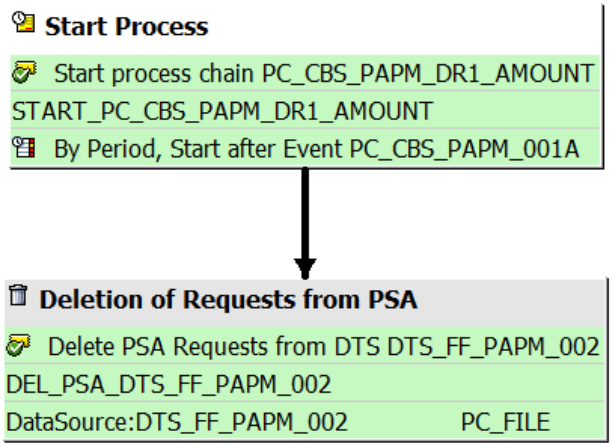

2. PC_CBS_PAPM_002A - PC CBS PaPM - Driver 2 Head Count Del PSA - Event Trigerred - **PC_CBS_PAPM_002A**

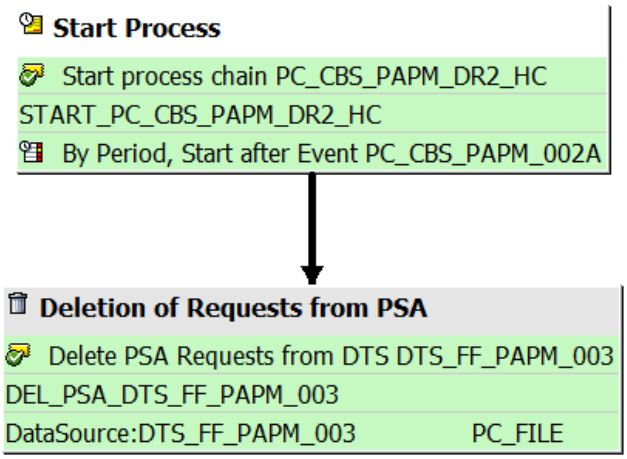

3.PC_CBS_PAPM_003A - PC CBS PaPM - Driver 3 Cadre Del PSA - Event Trigerred - **PC_CBS_PAPM_003A**

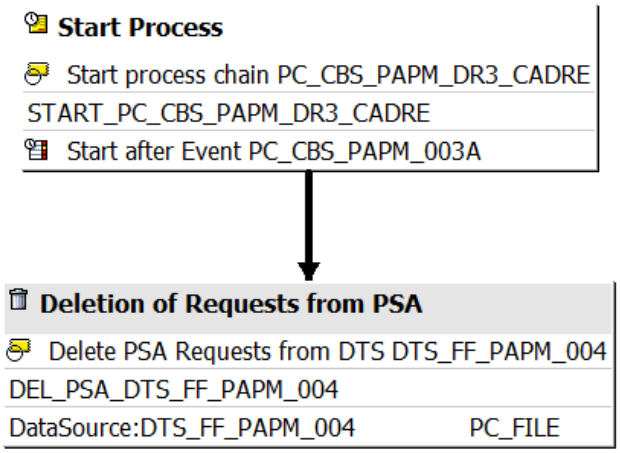

4. PC_CBS_PAPM_001 - PC CBS PaPM - Driver 1 Amount - **run in main Process chain**

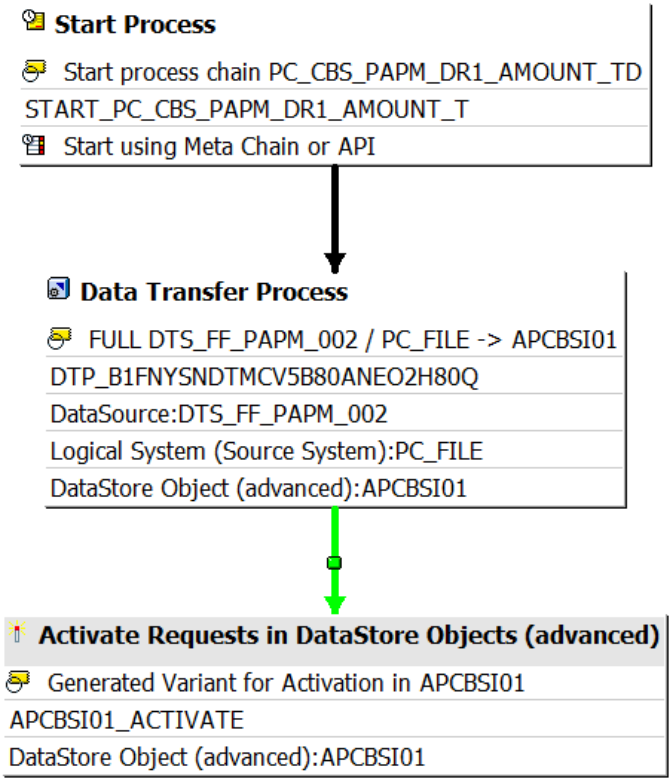

5. PC_CBS_PAPM_002 - PC CBS PaPM - Driver 2 Head Count - **run in main Process chain**

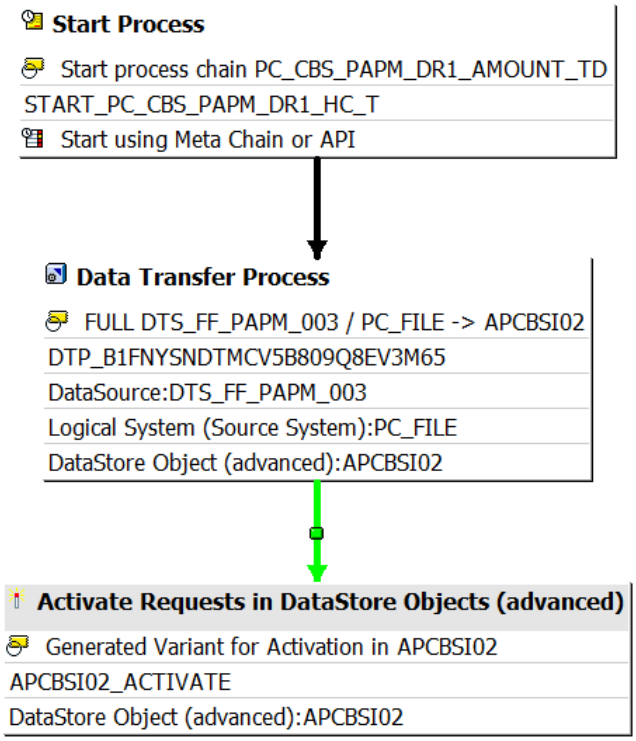

6. **PC_CBS_PAPM_003** - PC CBS PaPM - Driver 3 Cadre - **run in main Process chain**

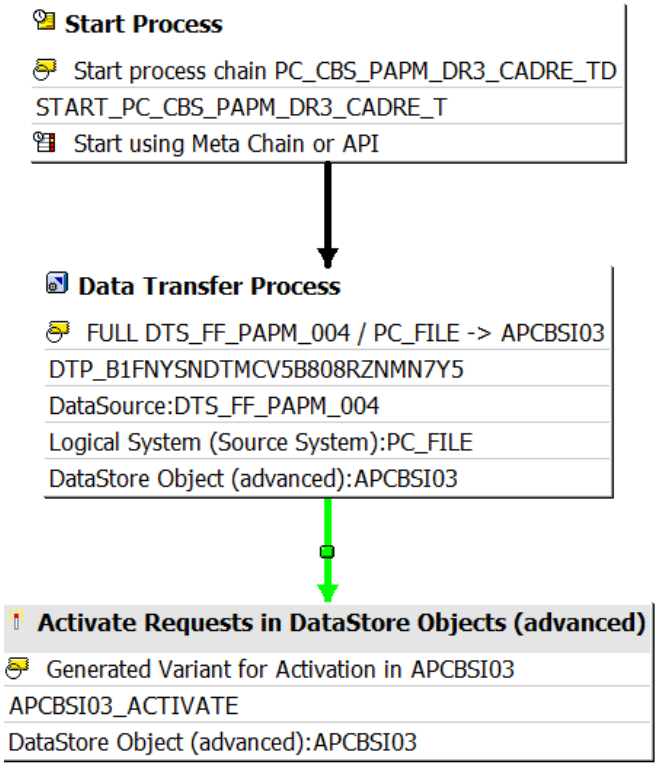

Main Chain

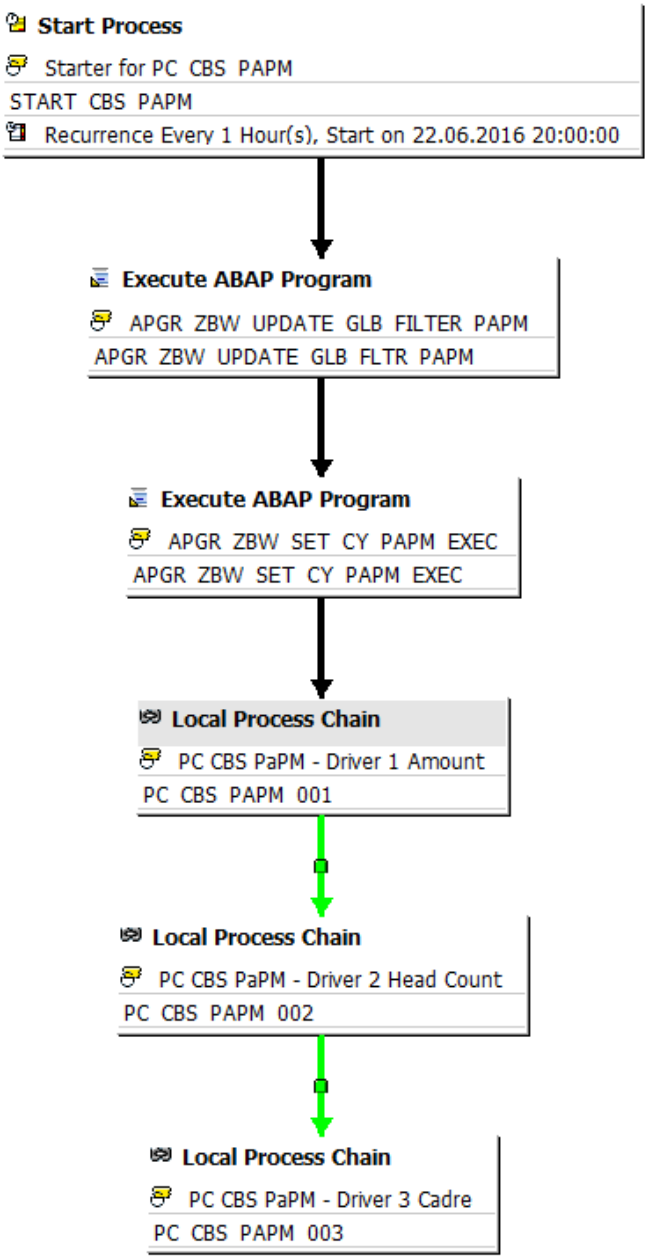

Data-loading Layers

CBS Invoicing Virtual Layer	IA_FMCO_CO_CBSI_VIRTUAL
PAPM Driver 01 Amount	CPCBSI02
PAPM Driver 01 Amount	APCBSI01
PAPM Driver 02 HeadCount	CPCBSI03
PAPM Driver 02 HeadCount	APCBSI02
PAPM Driver 03 Cadre and All	CPCBSI04
PAPM Driver 03 Cadre and All	APCBSI03
PAPM Transactional Source (CBS query)	CPCBSI01
PAPM Transactional source (CBS query)	ABCBSI01

CBS Invoicing Propagation Layer	IA_FMCO_CO_CBSI_PROPAGATION
PAPM Driver 01 Amount	APCBSI01
RSDS DTS_FF_PAPM_002 PC_FILE -> ADSO APCBSI01	0MOWC8REG9HM5BF66WV2CHHQERFNAV1Y
FF DRIVER 01 value	DTS_FF_PAPM_002
DTS_FF_PAPM_002 FULL	ZPAK_5IR0H6FPMU7B2MJK3UU5MMIWA
DTS_FF_PAPM_002 TEST	ZPAK_5IUV4XFBXBB1HFPY7JMHJ93XM
IP: PAPM FF DRIVER 01 value	ZPAK_5JDIM6DDX9A04WFMIIPSVS10Q
Data Transfer Processes	APCBSI01
FULL DTS_FF_PAPM_002 / PC_FILE -> APCBSI01	DTP_B1FNYSNDTMCV5B80ANEO2H80Q
Data Flow Upwards	_DATAFLOW_UPWARDS
PAPM Driver 02 HeadCount	APCBSI02
RSDS DTS_FF_PAPM_003 PC_FILE -> ADSO APCBSI02	0NNN5PP8XJG35S88CHY2PZPLGUWVCIT3
FF DRIVER 02 HC	DTS_FF_PAPM_003
DTS_FF_PAPM_003 FULL	ZPAK_5IUUBBL7EV03JI4F63VODLD7U
DTS_FF_PAPM_003 TEST	ZPAK_5IUJXRELHNYSRJJ6DCUAAI3AI
IP: PaPM - FF DRIVER 02 HC	ZPAK_5JDSXL61BQN2USE4TVE1W4AP6
Data Transfer Processes	APCBSI02
FULL DTS_FF_PAPM_003 / PC_FILE -> APCBSI02	DTP_B1FNYSNDTMCV5B809Q8EV3M65
Data Flow Upwards	_DATAFLOW_UPWARDS
PAPM Driver 03 Cadre and All	APCBSI03
RSDS DTS_FF_PAPM_004 PC_FILE -> ADSO APCBSI03	07S6XH0KV6NK7U5HOV3P1HDGM98QMQV8
FF DRIVER 03 Cadres and ALL	DTS_FF_PAPM_004
DTS_FF_PAPM_004 FULL	ZPAK_5IUUBAQHB0L9GZYMIRMB9DICQ
IP: PaPM - FF DRIVER 03 Cadres and ALL	ZPAK_5JDILR07LX7D9EDO7T0UW5EZU

Transformations

1.DTS_FF_PAPM_002 PC_FILE -> ADSO APCBSI01

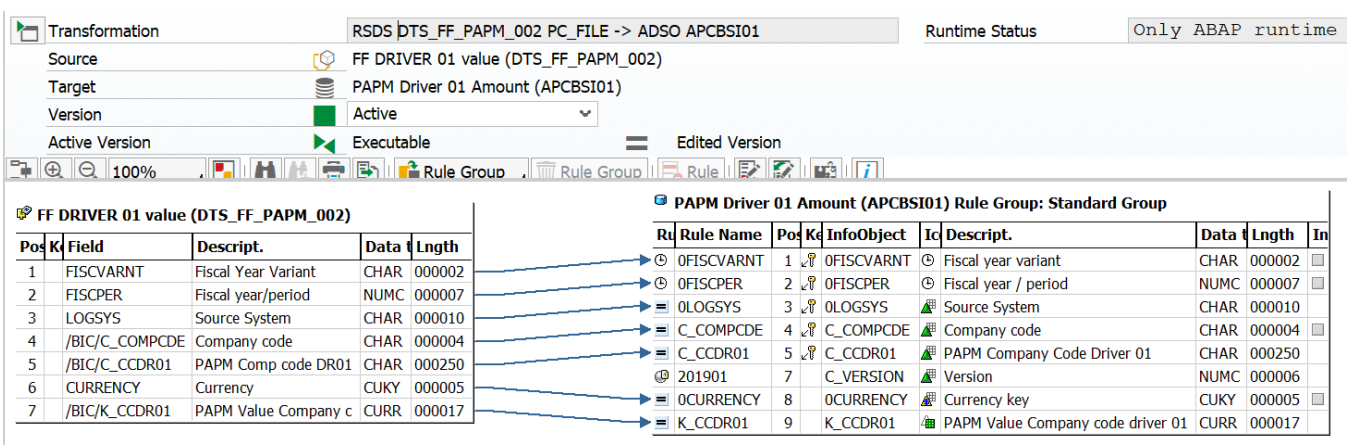

2. DTS_FF_PAPM_003 PC_FILE -> ADSO APCBSI02

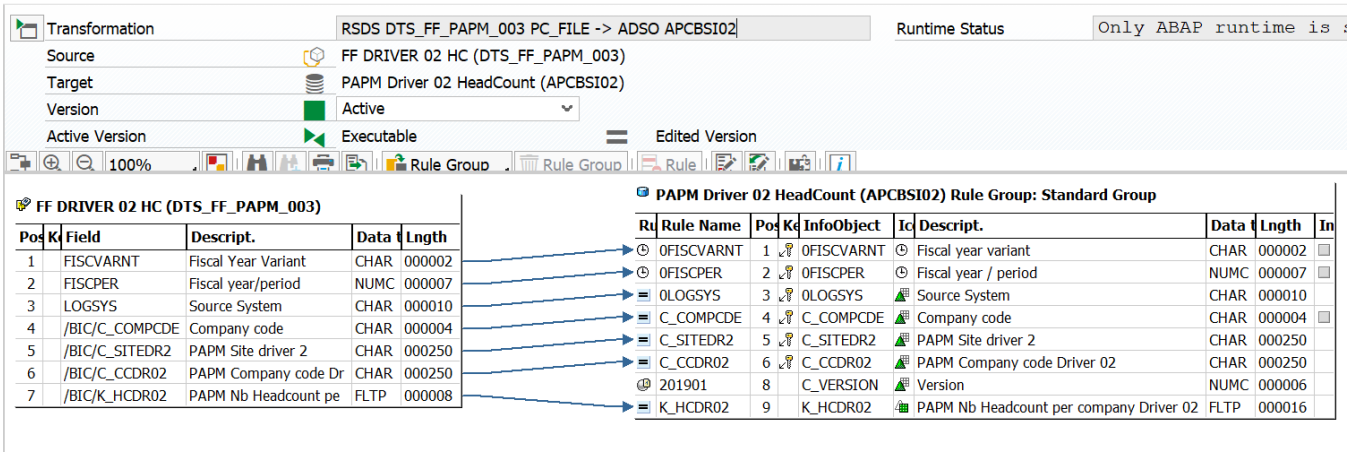

3. DTS_FF_PAPM_004 PC_FILE -> ADSO APCBSI03

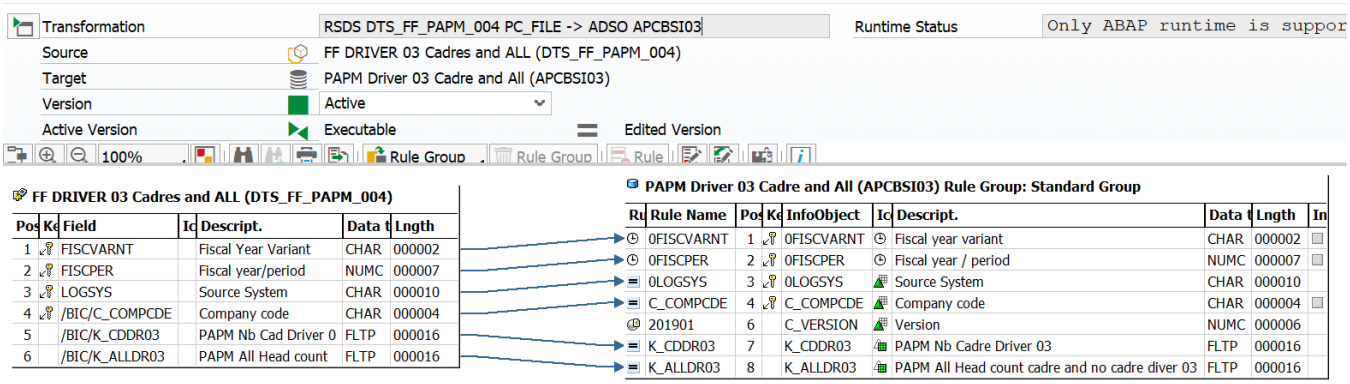

Average performance

Key Figure	Estimation
~ Average Process Chain Runtime	
~ Average nb of rows loaded per load	
~ Total nb of rows loaded (if full)	
~ Average Runtime for 10k lines	

Record Keeping

Reporting

Queries End User Documentation

Main queries

BW_QRY_CPCBSI01_0001 PAPM BW Transactional data with version

Main functionalities

Broadcast

Maintenance

Known bugs

Recurring procedure

Planned Evolution